Team 29: Battery Cycler for Lithium-Ion Cells

Team Member: Abdullah Zafar, Zhiwei Zhang

Faculty Advisor: Dr. Chunhong Chen

Engineering
University of Windsor

Department of Electrical and Computer Engineering
Capstone 2025: Team #29
July 25th, 2025

Abstract

This project aims to create a low-cost automated battery cycler for testing single-cell lithium-ion batteries. It offers an affordable alternative to expensive commercial testers, making battery research more accessible to students and smaller labs. The system uses an Arduino UNO, INA219 sensor, TP4056 charging module, and logic-level MOSFETs, to control and monitor charging and discharging cycles. Voltage, current, power and temperature are measured in real-time, with data streamed to Python for datalogging and later analyzed using MATLAB.

Introduction

This project addresses the high cost of battery testing by developing a low-cost, automated battery cycler using widely available components. The current state-of-the-art in battery testing offer multi-channel, high-precision control, but cost thousands of dollars and are out of reach to students, and small-scale researchers. Our solution repurposes an Arduino UNO, INA219 current sensor, NTC thermistor, TP4056 charging module, and logic-level MOSFETs into a reliable, single-cell battery cycler. It automates the charging and discharging process while measuring voltage, current, power, and temperature in real-time. Data is streamed and logged via Python, then analyzed using MATLAB to provide professional-quality results. By utilizing low-cost components and open-source tools, this project provides a practical and scalable alternative to commercial testers, so battery research and testing can be done on a budget.

Deliverables

In this project, we intend to demonstrate the functionality of a battery cycling system designed, shown below, capable of automated charging and discharging of a single-cell lithium-ion battery. The complete system includes both hardware and software components designed to operate in real-time and provide battery performance insights.

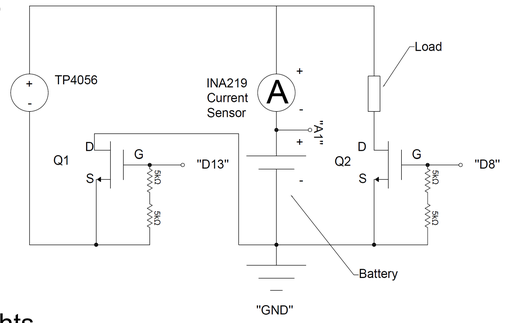

Figure 1. Battery Cycler Circuit Schematic

Hardware Subsystem: A compact cycling circuit built around the Arduino UNO, including:

- Charging and discharging switching using two logic-level N-channel MOSFETs (IRL3705NPBF)
- INA219 current sensor for current, and power monitoring
- TP4056 charging module with a 3.7V 1600mAh Li-ion battery
- 3Ω, 10W power resistor to serve as the discharge load
- NTC thermistor and DHT11 sensors to track battery and ambient temperature.
- All components are soldered on prototype boards using 22 AWG wiring for safe current handling.

Control Interface: Features an LCD screen and a two-button system for manual control:

- Button 1: Activates charging mode
- Button 2: Activates discharging mode
- Both buttons held together: Puts the system into standby mode
- A long press toggles LCD views between electrical and environmental data

Software Subsystem: Cycle control & data logging

- Arduino firmware to read sensors, control states, and update the display
- Python script for real-time serial data logging in CSV format
- MATLAB for post-processing and visual analysis of logged data

Experimental Result

During charging, the voltage increased from ~3.6V to 4.2V while current gradually decreased, the general trend shows expected constant-current and constant-voltage behaviour of a Li-ion cell. Upon reaching full charge, the system automatically transitioned to discharging mode. Voltage then steadily declined as the battery discharged with current remaining relatively constant around 120–150 mA.

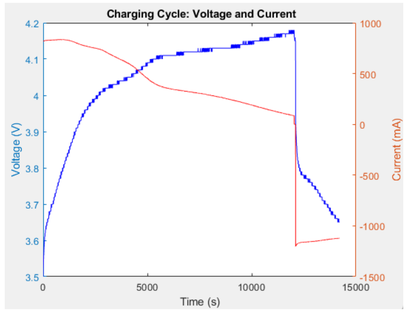

Figure 2. Charging Cycle Data

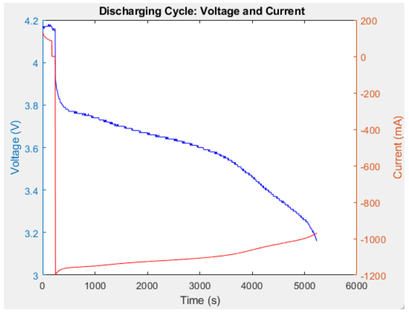

Figure 3. Discharging Cycle Data

Conclusions

The battery cycler met its performance goals by successfully automating charge/discharge cycles and the measured performance aligned with expected lithium-ion behaviour. Showing a stable constant-current and constant-voltage charging profile, and consistent current during discharge. The prototype achieved accurate real-time data logging and control using low-cost components. Its key innovation is demonstrated by offering a reliable, affordable alternative to commercial testers through open-source hardware and software integration.

Future Work

Future work can focus on full PCB integration. While the current version relies on modules, we have already designed a PCB around them. The next step is to transition to a fully integrated design using I²C for improved compactness and reliability. Additional upgrades could also include SoC estimation and multi-cell support with cell balancing to move closer to a commercial-grade battery testing solution.

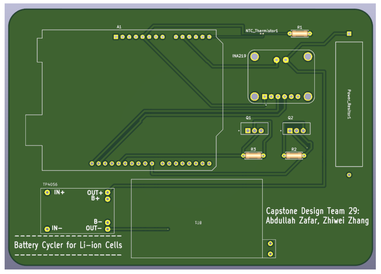

Figure 4. PCB Schematic

Acknowledgement

With utmost gratitude to Dr. Chunchong Chen for his guidance, and special thanks to Tony Fuerth & Tim Bolger